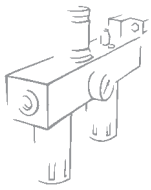

Newdeal FILTER REGULATOR

Highly reliable piston-operated filter regulator.
• Stability of the set pressure as the upstream pressure varies
• Standard overpressure blow-off valve
• Can be fixed to the wall using the holes is the sides of the body
• Metal bowl with external viewing
• Manual/semi-auto or automatic condensate drainage

TECHNICAL DATA		FR ND 1/4	FR ND 3/8''	FR ND 1/2''
Threaded port		1/4''	3/8''	1/2''
Setting range	bar	0 to 8 - 0 to 12		
Degree of filtration		4µm 20µm 50µm		
Max. inlet pressure	MPa	1.8		
	bar	18		
	psi	261		
Flow rate at 6.3 bar (0.63 MPa÷91 psi) ΔP 0,5 bar (0,05 MPa÷7 psi)	Nl/min	260	1000	
	scfm	9.2	35.5	
Flow rate at 6.3 bar (0.63 MPa÷91 psi) ΔP 1 bar (0.1 MPa÷14 psi)	Nl/min	700	2500	
	scfm	25	88.5	
Fluid		Compressed air		
Max temperature at 1 MPa; 10 bar; 145 psi	°C	50°		
	°F	122°		
Weight	Kg	0.5	1	
Wall fixing screws		M4x40	M4x55	
Mounting position		Vertical		
Gauge port		G 1/8''	G 1/8''	
Bowl capacity	cm^3	10	45	
Condensate drain		Manual – Semi-automatic (RMSA) / Automatic (SAC or RA)		
Notes:		The regulator pressure must always be set upwards.		
		The maximum inlet pressure for the version with RA automatic condensate drainage must not exceed 10 bar.		

COMPONENTS

① Zamak body
② Aluminium bowl
③ Technopolymer bell
④ Technopolymer knob
⑤ Technopolymer piston rod
⑥ Technopolymer plug
⑦ Technopolymer centrifuge
⑧ Technopolymer baffle plug
⑨ Technopolymer screen
⑩ Technopolymer bowl
⑪ Drain (RMSA)
⑫ OT 58 adjustind screw
⑬ OT 58 brass nut
⑭ Technopolymer ring nut
⑮ OT58 brass rod
⑯ Valve with NBR vulcanized gasket
⑰ Steel adjusting spring
⑱ NBR lip seal
⑲ NBR relieving seal
⑳ Steel valve compression spring
㉑ Sintered bronze filter cartridge
㉒ NBR gaskets

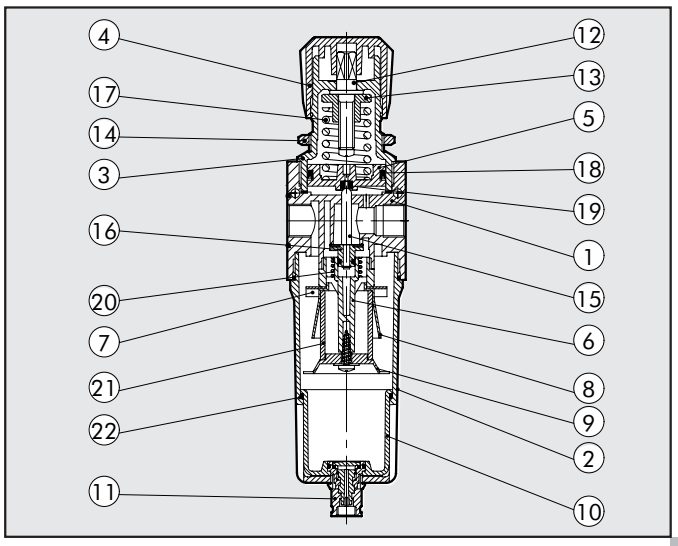

FLOW CHARTS

FR 1/4

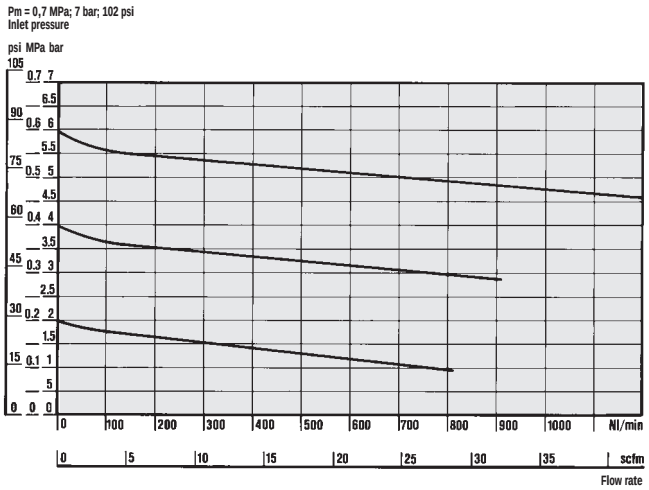

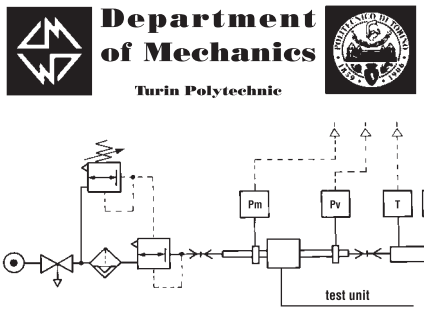

• Flow tests carried out at the Department of Mechanics, Turin Polytechnic, using the computerized test bench following CETOP RP50R recommendations (ISO DIS 6358-2-approved) with ISO 5167 diaphragm gauge.

FR 3/8 - 1/2

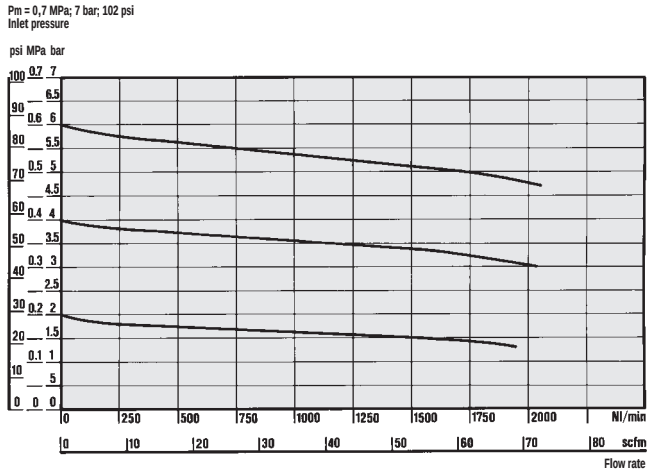

DIMENSIONS

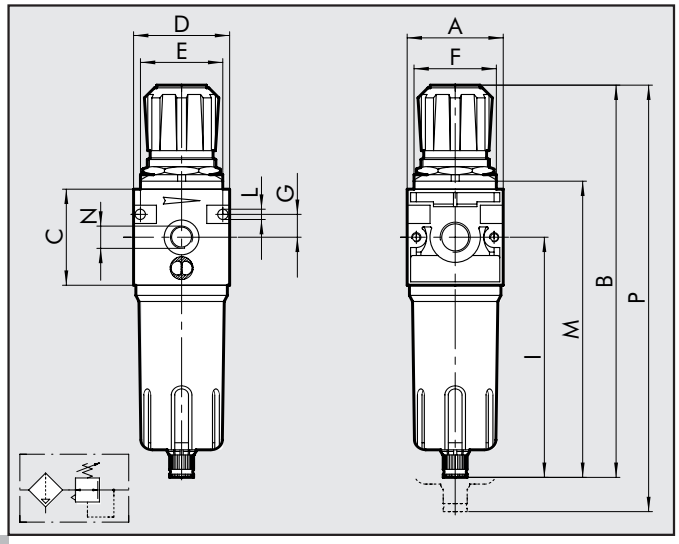

	G 1/4	G 3/8	G 1/2
A	42	60	
B	190	245	
C	42	60	
D	42	60	
E	36	52	
F	30x1.5	38x2	
G	10	14	
I	121	150	
L	M4 hole	M4 hole	
M	145	185	
N	1/8	1/8	
P	233	295	

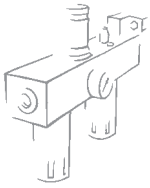

KEY TO CODES

FR	1/4	4µm	08	RMSA
ELEMENT	THREADED PORT	DEGREE OF FILTRATION	SETTING RANGE	CONDENSATE DRAIN
FR	1/4 3/8 1/2	4µm 20µm 50µm	08 012	RMSA SAC RA*

RMSA: Manual/semi-auto drain.
SAC: Automatic drain. Operates by depression - requires variable air take-offs.
RA: Automatic drain. Float-type operation irrespective of the pressure and flow rate.

* For ND 3/8 and 1/2 with RA, please contact our sales assistance department

ORDERING CODES

Code	Description
1225029	FR 1/4 4 08 RMSA TMV
1225509	FR 1/4 4 08 SAC TMV
1225053	FR 1/4 4 012 RMSA TMV
1225513	FR 1/4 4 012 SAC TMV
1225030	FR 1/4 20 08 RMSA TMV
1225510	FR 1/4 20 08 SAC TMV
1225054	FR 1/4 20 012 RMSA TMV
1225514	FR 1/4 20 012 SAC TMV
1225032	FR 1/4 50 08 RMSA TMV
1225511	FR 1/4 50 08 SAC TMV
1225056	FR 1/4 50 012 RMSA TMV
1225516	FR 1/4 50 012 SAC TMV
1325029	FR 3/8 4 08 RMSA TMV
1325509	FR 3/8 4 08 SAC TMV
1325053	FR 3/8 4 012 RMSA TMV
1325513	FR 3/8 4 012 SAC TMV
1325030	FR 3/8 20 08 RMSA TMV
1325510	FR 3/8 20 08 SAC TMV
1325054	FR 3/8 20 012 RMSA TMV
1325514	FR 3/8 20 012 SAC TMV
1325032	FR 3/8 50 08 RMSA TMV
1325512	FR 3/8 50 08 SAC TMV
1325056	FR 3/8 50 012 RMSA TMV
1325516	FR 3/8 50 012 SAC TMV
1425029	FR 1/2 4 08 RMSA TMV
1425509	FR 1/2 4 08 SAC TMV
1425053	FR 1/2 4 012 RMSA TMV
1425513	FR 1/2 4 012 SAC TMV
1425030	FR 1/2 20 08 RMSA TMV
1425510	FR 1/2 20 08 SAC TMV
1425054	FR 1/2 20 012 RMSA TMV
1425514	FR 1/2 20 012 SAC TMV
1425032	FR 1/2 50 08 RMSA TMV
1425512	FR 1/2 50 08 SAC TMV
1425056	FR 1/2 50 012 RMSA TMV
1425516	FR 1/2 50 012 SAC TMV

NOTES